# INTEGRATED SOLUTIONS, APPLICABLE IN INDUSTRIAL MANUFACTURING, FOR BIOMASS VALORIZATION IN HEATING SYSTEMS AND/OR DOMESTIC HOT WATER SUPPLY

## Doctoral Thesis - Summary

for obtaining the scientific title of Doctor at
the Politehnica University of Timișoara
in the doctoral field of Industrial Engineering
**author: eng. Kazomir Emil-Calin**
scientific supervisor: Prof.univ.dr.eng. & ec. Dumitru Țucu
month march, year 2026

## INTRODUCTION

The present research integrates the issue of depletable natural resources (fossil fuels) with the need for thermal energy production, under conditions of energy security, cost-effectiveness, and environmental protection, as highlighted by the review of the initial bibliography [1–7].

Energy sustainability may be the key to achieving climate neutrality, and the use of woody and non-woody biomass is essential in heating systems and the supply of domestic hot water, both recognized as major energy consumers [8–14].

### Importance and Necessity of the Chosen Topic

According to official statistics, in 2021, more than 1.2 million households in Romania used centralized heating systems (CHP plants, etc.) for space heating, another 2.5 million relied on individual systems based on natural gas, and approximately 3.5 million households (the majority in rural areas) used individual heating systems based on solid fuels (woody biomass and/or coal). Unfortunately, these are generally low-efficiency devices with high pollution levels. It can be stated that around 50% of Romanian households use wood and other types of biomass for heating of living spaces [15].

On the other hand, the majority of household energy consumption is allocated to space heating (62.8% of final energy use in the residential sector). Coupled with possible issues concerning the share of natural gas used for heating, this justifies the importance of developing, improving, and optimizing wood and biomass combustion systems for providing thermal energy [15].

Moreover, heating systems generate one-sixth of polluting emissions in the EU, imposing appropriate measures to achieve climate neutrality. In these circumstances, the study of biomass energy utilization in heating systems and domestic hot water supply becomes fully justified [15].

At the same time, carbon from biomass has been used for heating since prehistoric times, most often in the form present in the organic substances of wood, straw, hay, and others. Currently, in some conceptions, the issue of protecting the environment and, implicitly, the human being by reducing polluting emissions and immissions, as well as the issue of sustainability, is raised.

Fossil fuels (oil, natural gas, coal, etc.) present a series of disadvantages that compel researchers to seek sustainable alternatives. Despite the fact that fossil fuel reserves are declining at an alarming rate, 84.7% of the world's primary energy consumption was still covered by them in 2018, decreasing to 83% in 2019 and to 82% in 2022 [16, 17], with final estimates indicating that they may be depleted in the coming decades [18, 19].

## Research objectives

**The main objective** of the present doctoral thesis is:

**PO1** Optimization through integrated design of a new technological biomass combustion system, using analysis, modeling, and synthesis, while developing industrial methods and models as well as integrated technological solutions for the utilization of biomass in heating systems and domestic hot water supply.

To achieve the main objective, it is necessary to fulfill the following secondary objectives, corresponding to the activities carried out in the present research stage:

**SO1** Critical analysis of the current state of industrial methods and models of biomass heating systems (BCS), starting from the classical definition, in a descriptive manner and from the perspective of evaluating structural conditions and functional principles (Ch. 1 and 2.1);

**SO2** Evaluation of the level and main characteristics of the fundamental components of the system, and optimization of the main components, based on an up-to-date literature review, including the flow of the main scientific publications (Ch. 2.1 and 2.2);

**SO3** Development of an integrated BCS model, intended for assimilation into the industrial manufacturing of the generalized combustion system, in compliance with the basic principles of modern manufacturing, by identifying the main variables and the relationships among them, in the form of a cybernetic technological manufacturing system (Ch. 2.2, 2.3);

**SO4** Evaluation of the main characteristics of the fundamental components of the combustion system, approached as an industrial technological system, and testing of the designed constructive variants with parameter modifications (Ch. 2.3);

**SO5** Identification, within the proposed experimental model, of the main causes generating possible malfunctions, in order to establish optimal solutions for reducing reliability risks and the serious consequences they may cause during operation (fire, explosion, carbon monoxide poisoning) (Ch. 2.3);

**SO6** Ranking of failure causes and functional risks using statistical-mathematical methods, and establishment of functional cause-effect relationships based on the statistical processing of results, with significance analysis using ANOVA (Ch. 2.3).

## Thesis Structure

The thesis is structured into three chapters.

In **chapter 1**, the potential of biomass as a renewable energy source is presented, together with its advantages and limitations, with emphasis placed on sustainability and energy efficiency.

**Chapter 2** marks the beginning of the personal contributions section. It is structured into three subchapters for the presentation of the results of the author's own research activities, and also includes a section dedicated to partial conclusions.

In **subchapter 2.1**, a constructive, functional, and economic analysis of the main biomass combustion systems available on the market and in the specialized literature was carried out. The analysis considered both individual operational aspects and the identification of technical concepts (constructive, structural, etc.) of biomass burners.

In **subchapter 2.2**, two objectives were pursued:

1. The development of the functional concept of a new biomass heating system (BCS) model and the selection of an optimal package of functions for this system from the design stage.
2. The testing of two methods for the evaluation, comparison, and classification of biomass combustion systems.

To evaluate the 58 biomass combustion systems selected for analysis (out of the 123 initially considered), an original package of 24 critical criteria for the evaluation and analysis of biomass combustion systems was developed.

**Subchapter 2.3** is divided into two parts, namely: the modeling of thermal-type functional processes and the modeling of aerodynamic-type functional processes.

**Chapter 3** is dedicated to the general conclusions and a synthesis of the personal theoretical, experimental, and applicative contributions, including the presentation of perspectives for research and for improving biomass thermal utilization technologies.

# 1 CURRENT STATE OF INFORMATION FROM THE SPECIALIZED LITERATURE REGARDING BIOMASS UTILIZATION SYSTEMS

**The objective** of this chapter is to provide a general assessment of the current state of biomass thermal utilization, based on specialized literature, in order to evaluate the potential impact of developing new biomass combustion–based thermal utilization systems and to outline research directions in the context of energy efficiency and sustainability requirements..

## 1.1 Critical analysis of the possibilities for biomass utilization

The main concern in producing energy from biomass is continuously increasing worldwide due to serious concerns regarding energy security, climate change, and quality of life [18, 20, 21].

The use of fossil fuels to generate thermal energy is accompanied by a number of drawbacks that compel researchers to seek sustainable solutions and alternatives for valorizing the solar energy stored in biomass.

Biomass-type fuels have advantages that currently generate a high level of the concern in their use for thermal energy production.

## 1.2 Analysis of the solutions and the impact of renewable energy use. Perspectives, the place, and role of biomass

The increase in the standard of living over the past centuries, determined mainly by the technological revolution, has led to a direct proportional relationship between population growth and the demand for primary energy. Modern industry, as well as the continuously expanding needs of the population, create the necessity for the economic and technological adaptation of civilization in all fields, with emphasis on the conservation of finite resources [26], the reduction of price volatility [27], the reduction of emissions and immissions, and the orientation toward clean energy alternatives [28], sustainability [29], and environmental protection [20]. The energy sector is in urgent need of new methods to produce less polluting energy, given that demand is increasing and will continue to grow [30].

This increase in the demand for primary energy in recent decades has been covered largely by the combustion of fossil fuels. In the long term, serious concerns arise regarding the security of energy supply.

At present, in a globally industrialized environment, a triple threat to primary energy supply security can be observed: the depletion of fossil fuel reserves [18, 19], the increase in greenhouse gas emissions [31], and the growing demand for primary energy (Figure 1.1 [39]). It is therefore evident that there is a need for the continuous development of renewable energy utilization and conversion technologies, whose growth trend is slightly but modestly upward.

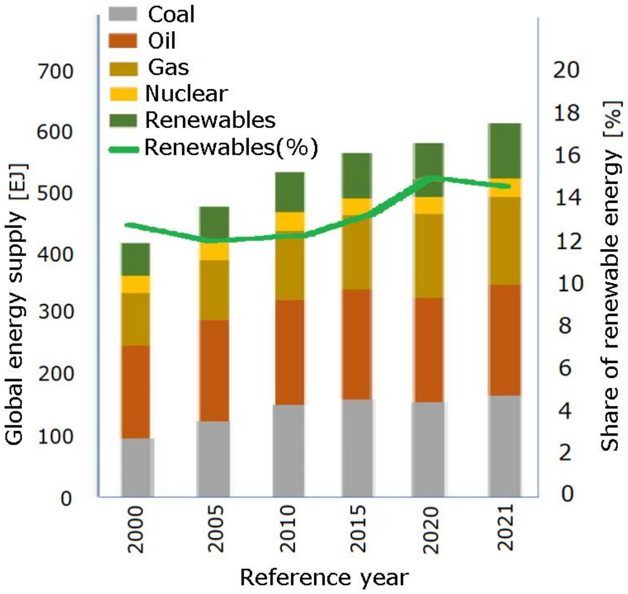

Fig. 1.1.1 Structure of the total primary energy consumption supplied globally in the years 2000–2021 [processed after 39]

The use of solar energy stored in biomass represents the most accessible category of renewable energy for the world’s population (72.3%), primarily for residential heating, due to necessity and the lack of infrastructure [42].

The utilization of biomass must ensure both the technological requirements regarding the efficiency of biomass energy use in furnaces for central heating—under conditions of profitability and environmental protection—and the safety of functional processes, particularly in situations of power outages. Under such conditions, the continuous modification and optimization of existing combustion systems becomes necessary.

The optimization of biomass thermal utilization systems involves the optimization of their basic components, namely the burner system and the heat exchanger. However, before addressing the optimization of a burner system, a critical analysis of existing systems is required.

# 2 ORIGINAL CONTRIBUTIONS REGARDING THE DEVELOPMENT OF A BIOMASS COMBUSTION SYSTEM THROUGH INTEGRATED DESIGN

## 2.1 CONSTRUCTIVE, FUNCTIONAL AND ECONOMIC ANALYSIS OF BIOMASS BURNERS – CRITERIA AND RESULTS

The objective of this subchapter is to provide a general evaluation of the main technologies for converting biomass into thermal energy, through a constructive, functional, and economic analysis of the main biomass combustion systems. The analysis aims to identify the technical concepts (constructive, structural, etc.) of biomass burners available on the market.

### 2.1.1. Research Methodology

The present study is structured on the basis of an original methodology that focused on the constructive, functional, and economic analysis of the main biomass combustion systems, carried out in several stages as shown in Figure 2.1.

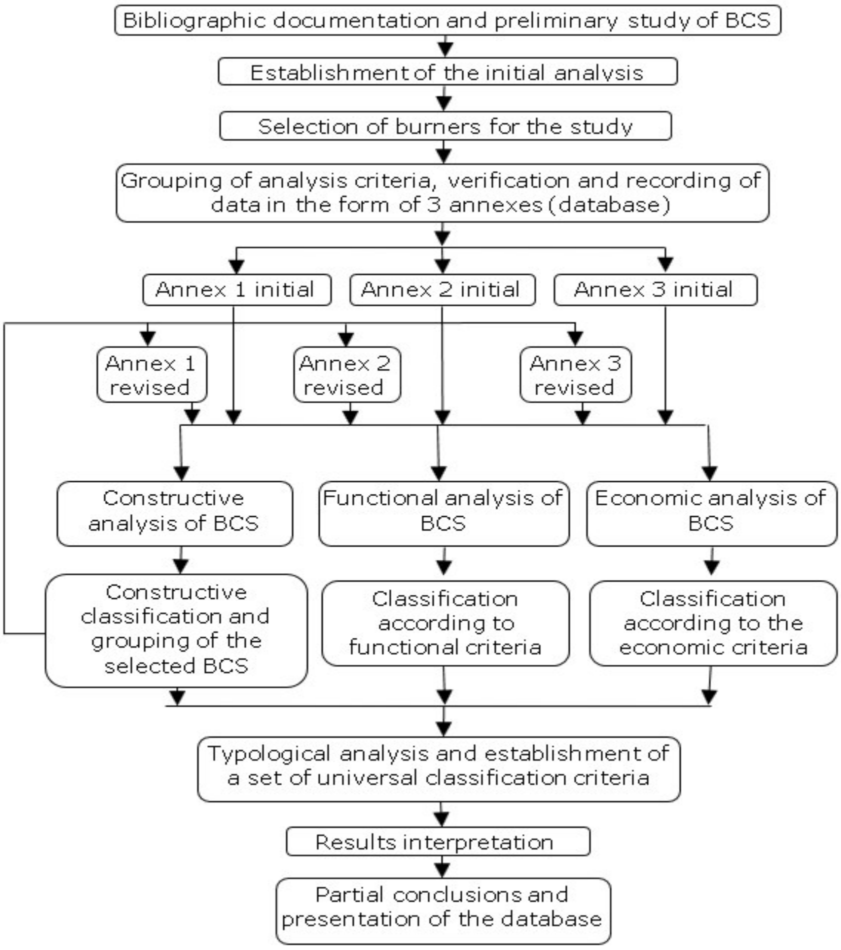

Fig. 2.1 Methodology for the evaluation of the main biomass combustion systems

### 2.1.2 Constructive analysis of biomass burners

Following the individual analysis, a classification of BCS was carried out from a constructive point of view. They were classified into groups, subgroups, classes, families, and categories according to the identified constructive concepts.

The group of fixed-bed burners was divided into two subgroups, the subgroups into classes, the classes into families, and the families into 9 types/categories.

The group of moving burners was divided into subgroups, classes, families, and the families into 8 types/categories.

The group of fluidized-bed burners was divided into two subgroups, the subgroups into classes, the classes into families, and the families into 2 types/categories.

### 2.1.3 Functional analysis of biomass burners

**1. According to the power criterion,** biomass combustion systems were divided into three usage classes (Figure 2.5).

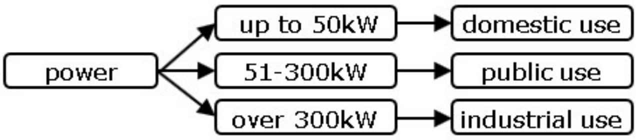

Fig. 2.5 Classification of biomass burners according to the power criterion [processed after 177–180]

In the category **“Domestic-use burners”**, 47 BCS were included; in the category **“Public-use burners”**, 9 BCS were included; and in the category **“Industrial-use burners”**, 4 BCS were included.

2 **According to the emission criterion**, BCS were divided into three emission classes based on nominal power, following CE/EN 303-5:2021+A1:2023 Part 5 [181].

- In the category “Domestic-use burners with power up to 50 kW, emission class 3”, three burners were included. In the other categories for emission class 3, no burner was included.
- In the category “Burners with power up to 500 kW, emission class 4”, only one burner was included.
- In the category “Burners with power up to 500 kW, emission class 5”, thirteen burners were included.

**3 According to the operational safety criterion**, burners are classified into three safety classes (Figure 2.7), in accordance with CE/EN 303-5:2021+A1:2023 Part 5 [181] and EN 60730-2-5:2015/A2:2021 [182].

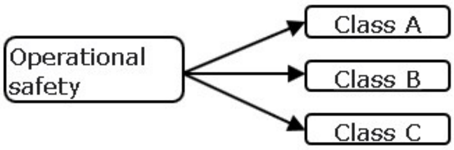

Fig. 2.7 Classification of biomass burners according to the operational safety criterion

Class A presents a low level of operational safety, Class B presents a medium level of operational safety, and Class C presents a high level of operational safety.

In Class A of operational safety, 14 BCS were included; in Class B, 41 BCS were included; and in Class C, 5 BCS were included.

**4 In the analysis based on the thermal conversion efficiency criterion,** according to CE/EN 303-5:2021+A1:2023 Part 5 [181], the thermal conversion efficiency can be determined only for the entire system.

BCS are classified into three efficiency classes (Figure 2.8).

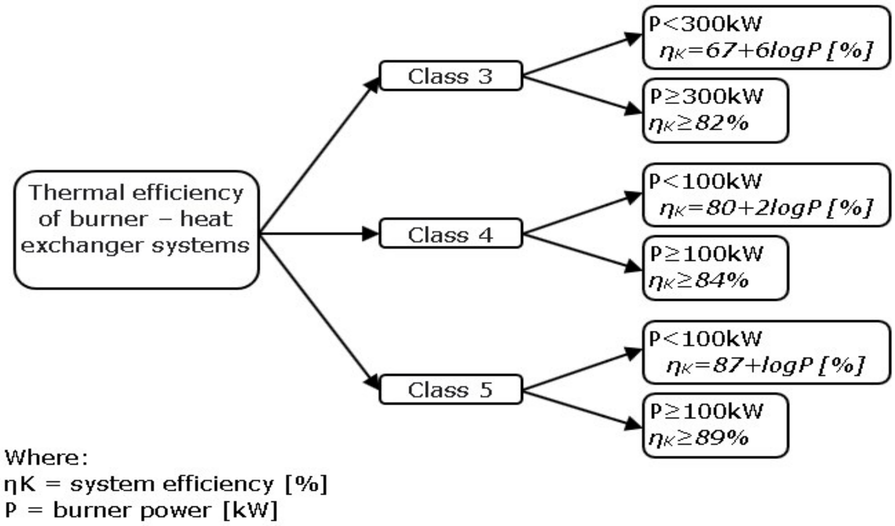

Fig. 2.8 Classification of burner–heat exchanger systems according to thermal efficiency [processed after 181]

In efficiency Class 4, two burners were included, while in Class 5, twenty-three burners were included.

**5 According to the recommended fuel criterion**, the 58 biomass burners were classified by fuel type, as shown in Figure 2.9.

In the category of hybrid burners, 18 BCS were included, while in the category of dedicated burners, 40 BCS were included.

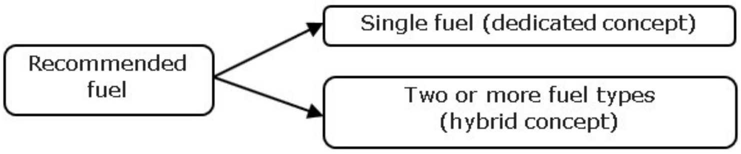

Fig. 2.9 Classification of biomass burner systems by recommended fuel criterion [processed after 181]

### 2.1. 4 Economic analysis of biomass burners

In this analysis and classification, the exact price of each burner was not indicated; instead, a division into four price classes was made, as shown in Figure 2.10. In Class 1 of burners, 10 BCS were included; in Class 2, 9 BCS were included; in Class 3, 8 BCS were included; and in Class 4, 4 BCS were included.

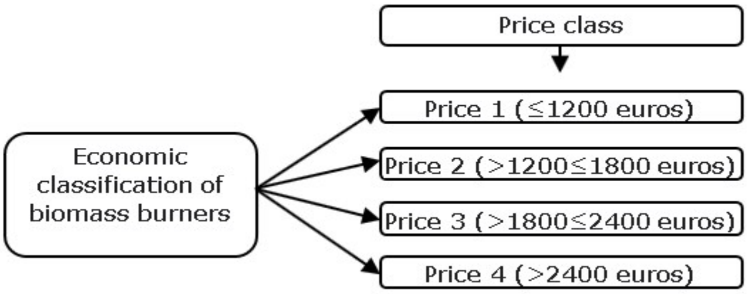

Fig. 2.10 Economic classification of biomass burners

### 2.1.5 Coding of the studied burners

In this section, the correlation was made between the current number of the burners from Annexes 1–3 and the burner code resulting from their constructive analysis classification. The burner code contains four characters corresponding to the three variables: group (X), category (Y), and current number within the category (ZZ).

### 2.1.6 Synthesis of results by components

#### 2.1.6.1 Conclusions regarding the individual technical analysis of biomass burners

Fixed-bed burners present issues regarding the automatic removal of ash.

Moving-bed burners solve the problem of ash removal through rotation, vibration, and translation systems of the combustion bed; however, the thermal conversion efficiency does not increase significantly.

Fluidized-bed burners solve the problem of ash removal through fluidization and increase the thermal conversion efficiency.

#### 2.1.6.2 Conclusions regarding the functional analysis of biomass burners

The analysis was carried out according to five parameters: power, emissions, operational safety, thermal conversion efficiency, and recommended fuel.

A clear trend can be observed toward the development of burners in the hybrid concept.

#### 2.1.6.3 Conclusions regarding the economic analysis of biomass burners

The burners were grouped into four price classes.

A large number of BCS with low cost can be observed, both fixed-bed and moving-bed, which compels manufacturers of new BCS to design modern, safe, and efficient burners at reduced costs in order to remain competitive.

### 2.1.6.4 Conclusions regarding the database

In Annexes 1–3, the synthesis of the collected data was carried out, representing the database.

## 2.2 EXPERIMENTAL RESEARCH FOR THE INTEGRATED OPTIMIZATION OF FUNCTIONAL PROCESSES IN THE BIOMASS COMBUSTION SYSTEM FOR INDUSTRIAL MANUFACTURING

Densified forms of biomass (pellets, briquettes, etc.) have also attracted the attention of consumers in developing countries, due to their ease of use, high efficiency, and simultaneously low levels of harmful emissions into the environment.

From the current market research, two major directions for improvement have been identified: the constructive optimization of the active components of the mechanical system itself, and the optimization of the functional regime through the automation of the mechanical system, providing control of functional parameters with real-time analysis. The focus of the present doctoral research is centered on both optimization directions.

### 2.2.1 Research methodology

The present study was structured on the basis of a methodology aimed at optimizing the functional processes of a BCS in several stages (Figure 2.18).

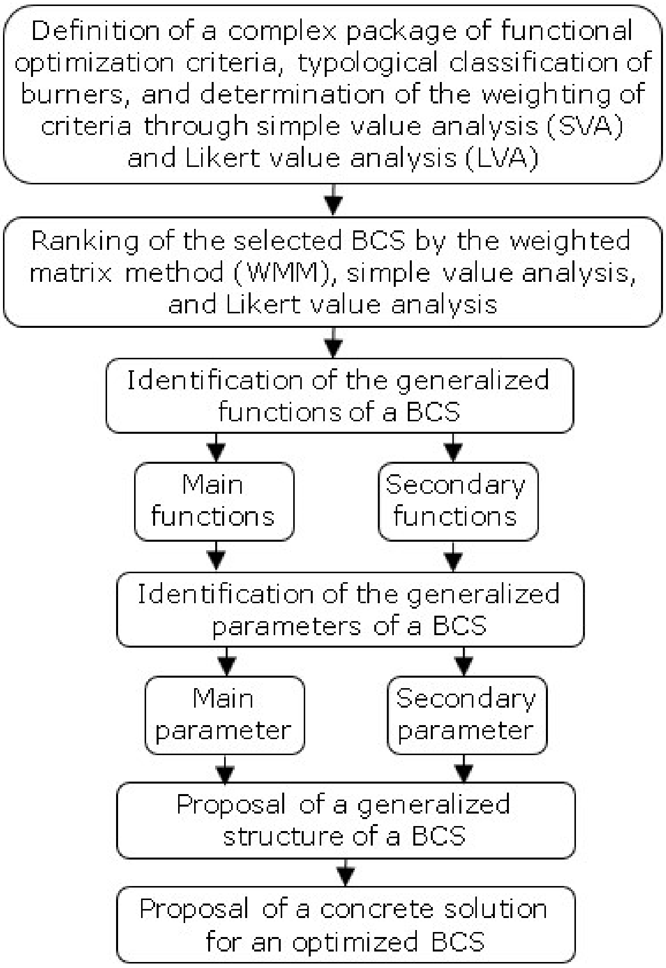

Fig. 2.18 Scheme of the research methodology for developing an optimized solution of a biomass combustion system

### 2.2.2 Results regarding the definition of a complex package of functional optimization criteria and the typological classification of biomass burners based on a group of criteria

#### 2.2.2.1 Results regarding the definition of a universal package of evaluation criteria for BCS

The selection of a set of optimization criteria for a new BCS was based on a package of criteria that integrates all the data from the study conducted so far. For the analysis, 24 out of 32 criteria were selected, presented as follows:

- Economic criteria: burner cost, functions, and burner power;
- Technological criteria: manufacturability, assembly, maintenance and repair, position of the combustion bed, composition of the combustion bed, shape of the combustion chamber, material of the combustion chamber, and constructive variant;
- Operational criteria: hybrid concept, presence of pellets in the tube, type of combustion, flue gas recirculation, and type of fuel supply;
- Reliability criteria: durability and interchangeability;
- Efficiency and emissions criteria: programming, control of primary and secondary air, advanced control and monitoring, accident and fire accident and fire protection;
- Automation and operating interface criteria: full automation, user-friendly menu with large display.

#### 2.2.2.2 Results regarding the analysis of the impact of optimization and classification criteria for BCS

At this stage of the work, a typological classification of the 58 BCS was proposed for criterial analysis. For this purpose, an analytical and classification framework was created based on 24 criteria, oriented toward manufacturability, profitability, and environmental protection, as well as ensuring the safety of functional processes.

The criteria are presented in Figure 2.19 in the form of analytical descriptors, and their names are listed below.

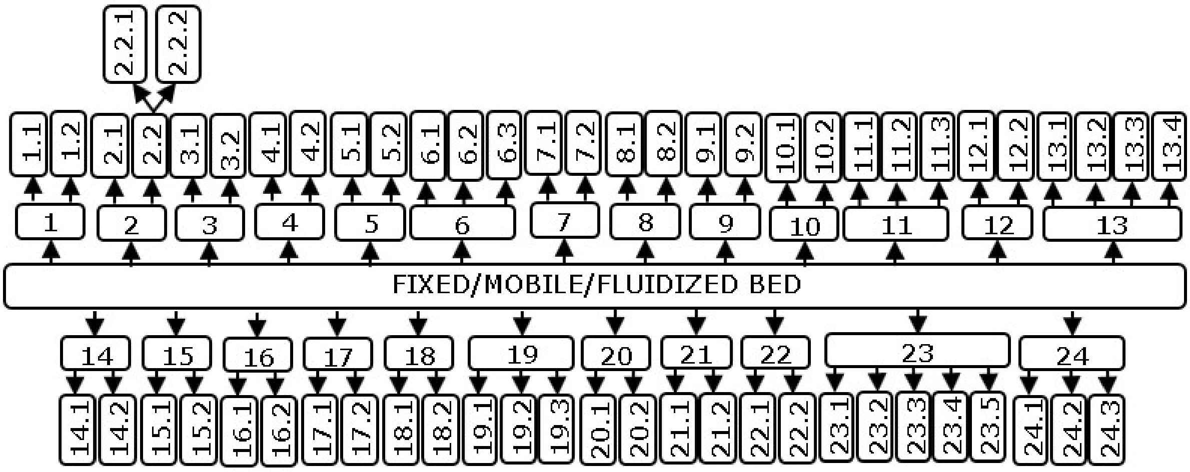

Fig. 2.19 Typological classification of biomass combustion systems with fixed/mobile/fluidized combustion bed

**Next criteria and levels were proposed (see figure 2.19):** 1-position of burning bad (1.1-tilted; 1.2-horizontal); 2-number of structural elements (2.1-simple; 2.2-composed); 3-shape of combustion chamber (3.1 – simple geometric shape; 3.2- complex geometric shape); 4 – material of combustion chamber (4.1-monomaterial; 4.2- composite); 5-concept (5.1-dedicated; 5.2- hybrid); 6- combustion chamber type (6.1 – tubular vertical (retort); 6.2 – tubular horizontal; 6.3- vertical cup); 7 combustion type (7.1-without gasification; 7.2-with gasification); 8- recirculation (8.1-without recirculation; 8.2-with recirculation); 9-cleaning system (CS) (9.1-without CS; 9.2-with CS); 10 – construction (10.1- monobloc; 10.2- modular); 11- power value (11.1- low (≤ 50Kw); 11.2 medium (51-300kW); 11.3 high (>300kW)); 12- powering of carburant supplying system (12.1- gearmotor; 12.2-stepper motor); 13 - construction of supplying system (13.1-screw; 13.2-gravitationally; 13.3-pneumatically; 13.4-mixttury); 14 – supplying type (14.1-free; 14.2-forced); 15 – directing of comburent (15.1-natural convection; 15.2-forced draw); 16 - flame control (16.1- with detecting; 16.2-without detecting); 17 – ignition system (17.1-automatically; 17.2- manual); 18 – gas emission class (18.1-classes 1st -2nd (forbidden); 18.2-classes 3rd - 5th (authorized)); 19 – combustion efficiency (19.1-high (5th class); 19.2-average (4th class); 19.3 – low (3rd class or less)); 20 – protection level against accidents and fire (20.1-high (classes B-C); 20.2 – low (class A)); 21 – level of automation (21.1-half automation; 21.2-full automation); 22 - process control (22.1-with local controller; 22.2-local and remote controller); 23 – burning flow (23.1-perpendicularly; 23.2-equicurrent; 23.3-countercurrent; 23.4-cyclon; 23.5-mixt); 24 – costs (24.1-reasonable (under 1200 euros; 24.2- average (1200-1800 euros); 24.3 high (over 1800 euros)).

#### 2.2.2.3 Results regarding the ranking of the selected criteria through simple value analysis and Likert value analysis

In Figure 2.20, the results obtained by the two methods concerning the weighting of the importance of the criteria are comparatively represented in graphical form. It can be observed that the Likert value analysis (LVA) method provides a more uniform distribution of the weights compared to the simple value analysis (SVA) method.

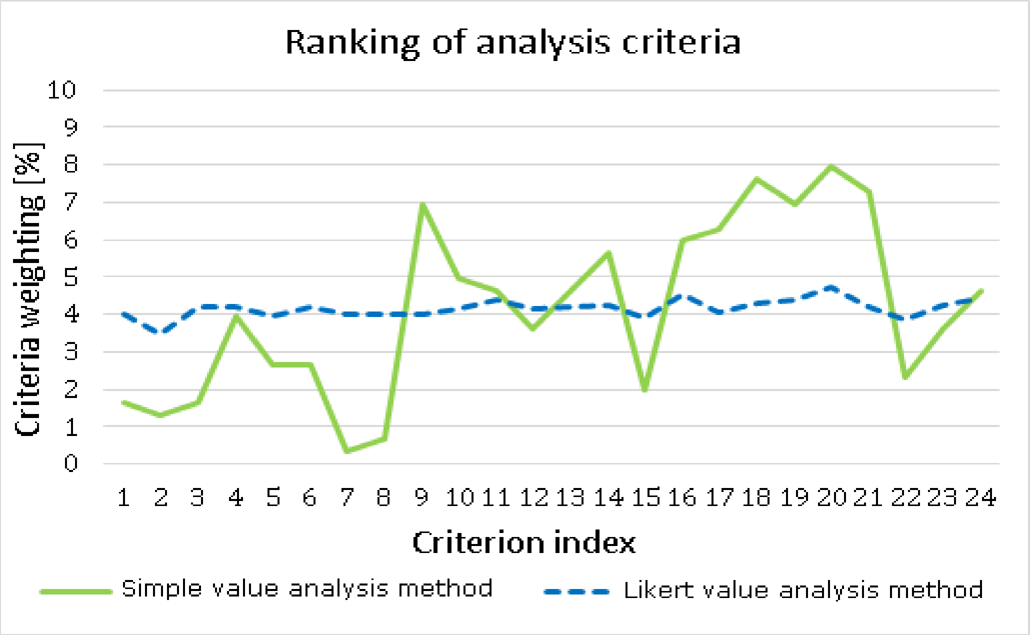

**Fig. 2.1 Diagram for determining the weighting of criteria importance using the SVA and LVA methods**

### 2.2.3 Results regarding the ranking of the selected BCS using the weighted matrix method (WMM), simple value analysis (SVA), and Likert value analysis (LVA)

In stage 1, a direct comparison and ranking of the BCS was carried out by verifying the number of fulfilled criteria and their weighting. It is specified that 58 burners were analyzed by this method, and the general diagram of criteria fulfillment is presented in figures 2.30, 2.31, and 2.32.

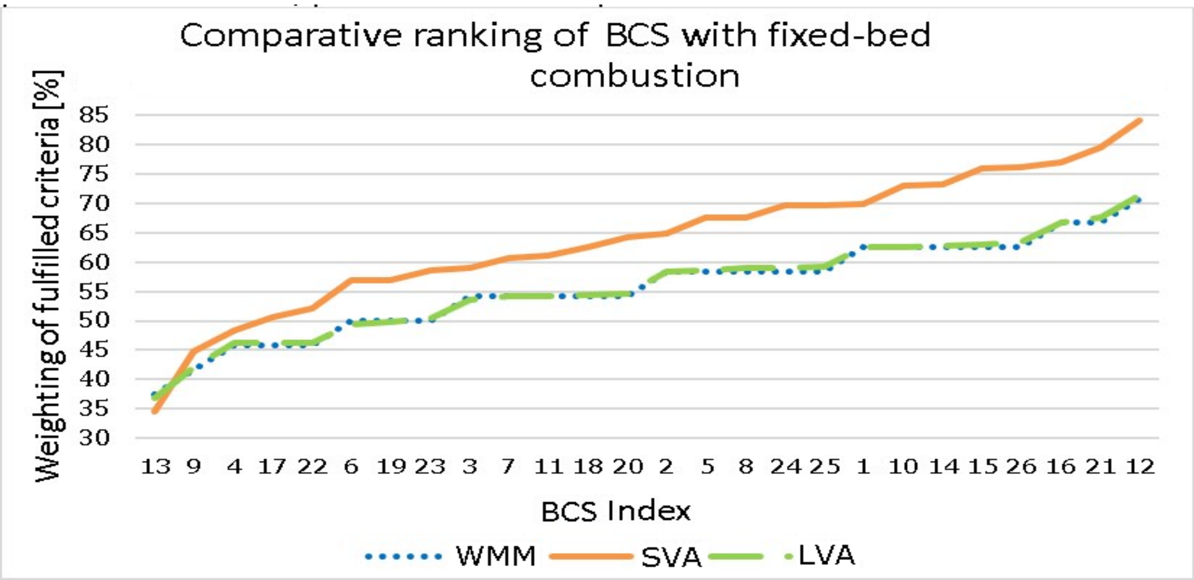

Fig. 2.30 General diagram showing the fulfillment of criteria for fixed-bed BCS using the hybrid method

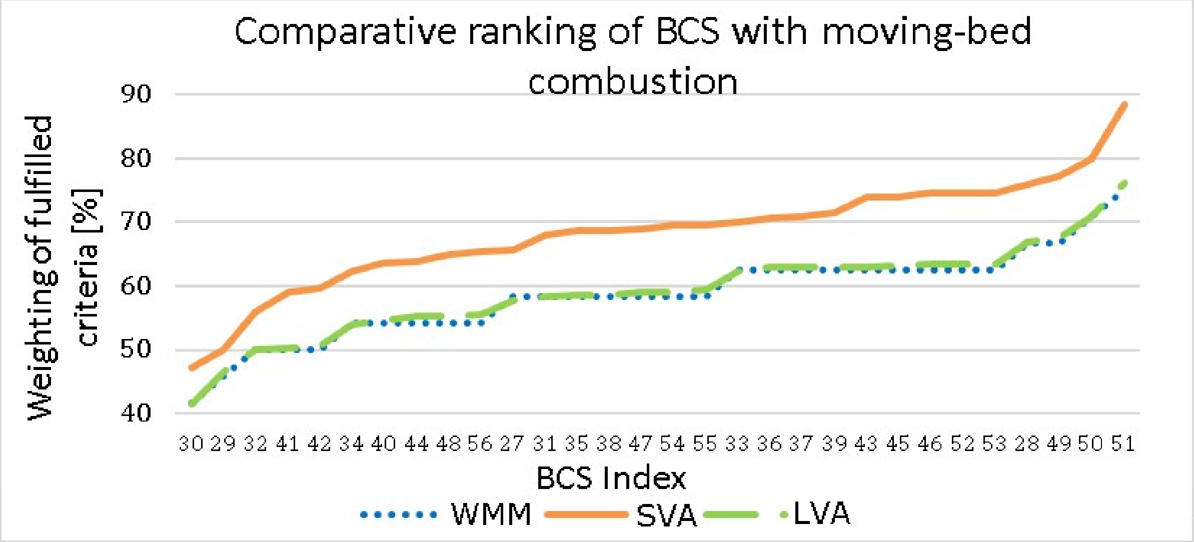

Fig. 2.31 General diagram showing the fulfillment of criteria for moving-bed BCS using the hybrid method

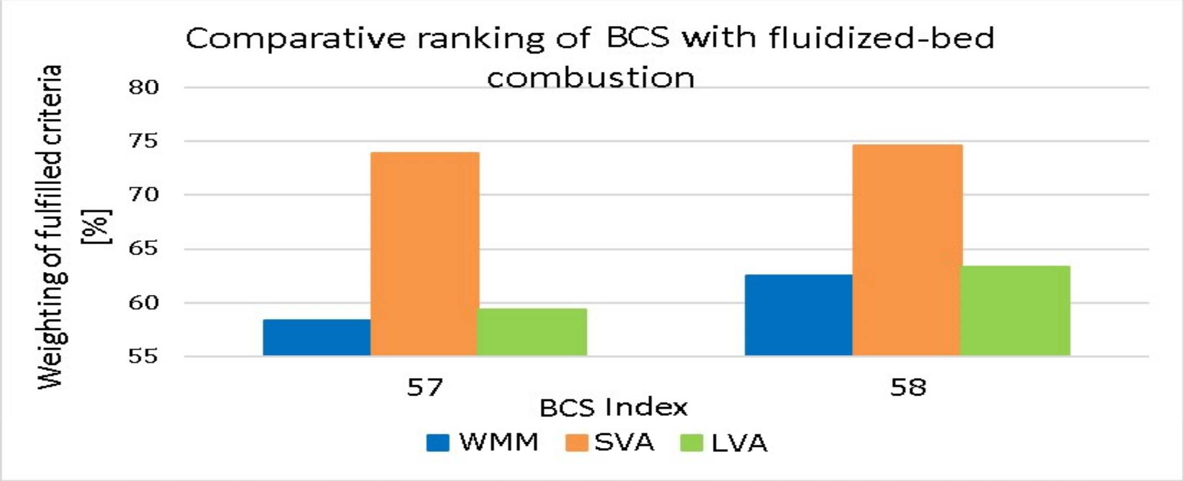

Fig. 2.32 General histogram showing the fulfillment of criteria for fluidized-bed BCS using the hybrid method

### 2.2.4 Identification of the generalized functions of a BCS

The optimization of a BCS involves optimizing its basic components, namely the burner system and the heat exchanger. This process requires establishing a clear concept by identifying customer needs and defining the functions that will meet those needs.

The functions of a biomass burner were divided into three categories: main functions, secondary functions, and auxiliary functions.

In the study, 7 main functions, 12 secondary functions, and 4 auxiliary functions were identified.

### 2.2.5 Identification of the generalized parameters of a BCS

The parameters represent the critical variables that influence the performance and efficiency of the burner and heat exchanger system. Thus, for most functions, one or more parameters were identified that must be verified and/or controlled. In the study, 15 main parameters and 7 secondary parameters were identified.

### 2.2.6 Proposal of a generalized structure of a BCS

The general model comprises 7 systems (intermediate fuel supply, internal fuel supply, oxidizer supply, combustion chamber, exhaust gas and cleaning system, automation system, and safety system) and serves as a supporting tool for the design of new models.

### 2.2.7 Proposal of a concrete solution for a new optimized BCS

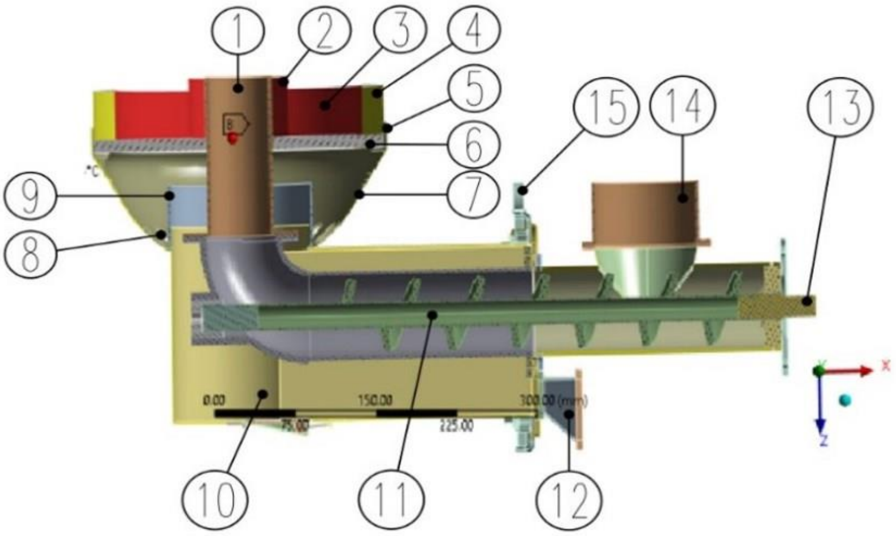

Fig. 2.38 Integrated constructive solution (3D model in CATIA V5 R30) for a new retort-type biomass burner

1 – biomass feed tube, 2 – internal refractory protection ring, 3 – combustion chamber, 4 – external refractory protection ring, 5 – external support ring, 6 – cast-iron grate, 7 – ash collector, 8 – ash discharge holes, 9 – air nozzle, 10 – air duct, 11 – internal screw conveyor, 12 – fan connection nozzle, 13 – motor coupling, 14 – biomass feed connection, 15 – mounting door to the heat exchanger

### 2.2.8 Synthesis of results

#### 2.2.8.1 Conclusions regarding the definition of a complex package of functional optimization criteria and the typological classification of biomass burners based on a group of criteria

Following the detailed analysis of the 58 BCS proposed for in-depth study, 24 analysis criteria were selected. The criteria were ranked, and the weighting of each criterion’s importance was identified through two methods: Simple Value Analysis (SVA) and Likert Value Analysis (LVA).

For all 58 BCS, using two hybrid comparison methods, notable differences were observed in the average relative differences: 13.65% for the WMM–LVA–SVA method and 0.76% for the WMM–LVA method.

Another remark is that the values obtained by the simple value analysis method are usually higher than those obtained by the other two methods.

#### 2.2.8.2 Conclusions regarding the identification of the generalized functions of a BCS

The functional concept of the new BCS was established by identifying the required functions based on the previous analyses and the critical criteria.

The functions of a biomass burner were divided into three categories: main functions, secondary functions, and auxiliary functions.

In the study, 7 main functions, 12 secondary functions, and 4 auxiliary functions were identified.

#### 2.2.8.3 Conclusions regarding the identification of the generalized parameters of a BCS

For each main or secondary function, at least one control parameter was identified. Similar to the functions, the parameters were classified into: main parameters and secondary parameters.

In the study, 15 main parameters and 7 secondary parameters were identified.

#### 2.2.8.4 Conclusions regarding the proposal of a generalized structure of a BCS

An integrated general structural model comprising all essential systems and subsystems was proposed in the present work, in the form of a block-type structure.

The general model includes seven systems (intermediate fuel supply, internal fuel supply, oxidizer/combustion air supply, combustion chamber, exhaust gas and cleaning system, automation system, and safety system) and serves as a supporting tool for the design of new models.

#### 2.2.8.5 Conclusions regarding the proposal of a concrete solution for a new optimized BCS

In this subchapter, the constructive, functional, and integrated constructive-functional scheme (3D model) of the proposed new mixed retort-type BCS is presented, detailing each selected component, its mode of operation, and the resulting products (gases, pollutants, ash, thermal energy, etc.).

## 2.3 INTEGRATED CONSTRUCTIVE DESIGN OF A BCS

The objective of the experimental research presented below was the constructive and functional optimization of a new BCS model through thermal and aerodynamic analysis, in order to ensure both the technological requirements regarding the efficient use of biomass energy in central heating systems—under conditions of cost-effectiveness and environmental protection—and the safety of functional processes, especially in special situations such as power supply interruptions.

The integrated constructive design of a BCS aims to integrate the constructive concept resulting from the analysis and optimization of functions derived from constructive and functional requirements with the technological capability of a potential industrial manufacturer, under conditions of constructive, functional, economic, technical, and technological optimization.

### 2.3.1 Research methodology

The present study was structured into several methodological stages, which focused on verifying the thermal and aerodynamic behavior of an original BCS concept, as well as its optimization. The succession of workflow steps is presented in Figure 2.39.

Software used: Ansys 2022 R2 (thermal modeling of the initial and final solution), Ansys 2024 R1 (CFD modeling „Computational Fluid Dynamics”), and others.

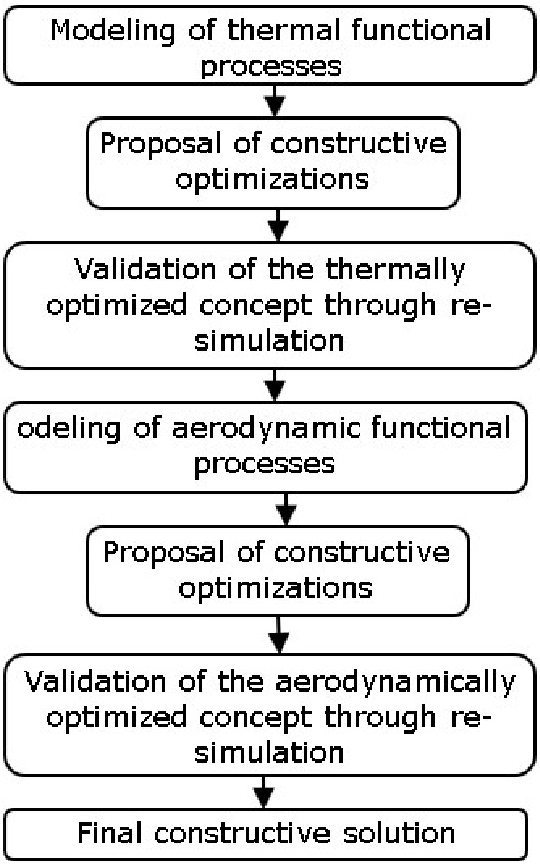

Fig. 2.39 Scheme of the methodology for analyzing the proposed

To verify the airflow behavior for the thermally optimized BCS, it was necessary to generate four 3D models adapted for fluid flow analysis. For this purpose, the negative model of each proposed variant was created, representing the airflow ducting, including all obstacles inside the BCS.

The proposed concepts (solutions) were named as follows:

1. Biomass combustion system, cylindrical connection (RC) with longitudinal slots (FL), (BCS, variant RC-FL);
2. Biomass combustion system, cylindrical connection with perpendicular slots (FP), (BCS, variant RC-FP);
3. Biomass combustion system, parallelepiped connection (RP) with longitudinal slots (FL), (BCS, variant RP-FL);
4. Biomass combustion system, parallelepiped connection with perpendicular slots (FP), (BCS, variant RP-FP).

The four analyzed models have four defined constructive configurations, obtained by combining two types of air connection (cylindrical connection (RC) and parallelepiped connection (RP)) with two different positions of the air inlet slots into the combustion chamber (Figures 2.42 and 2.43).

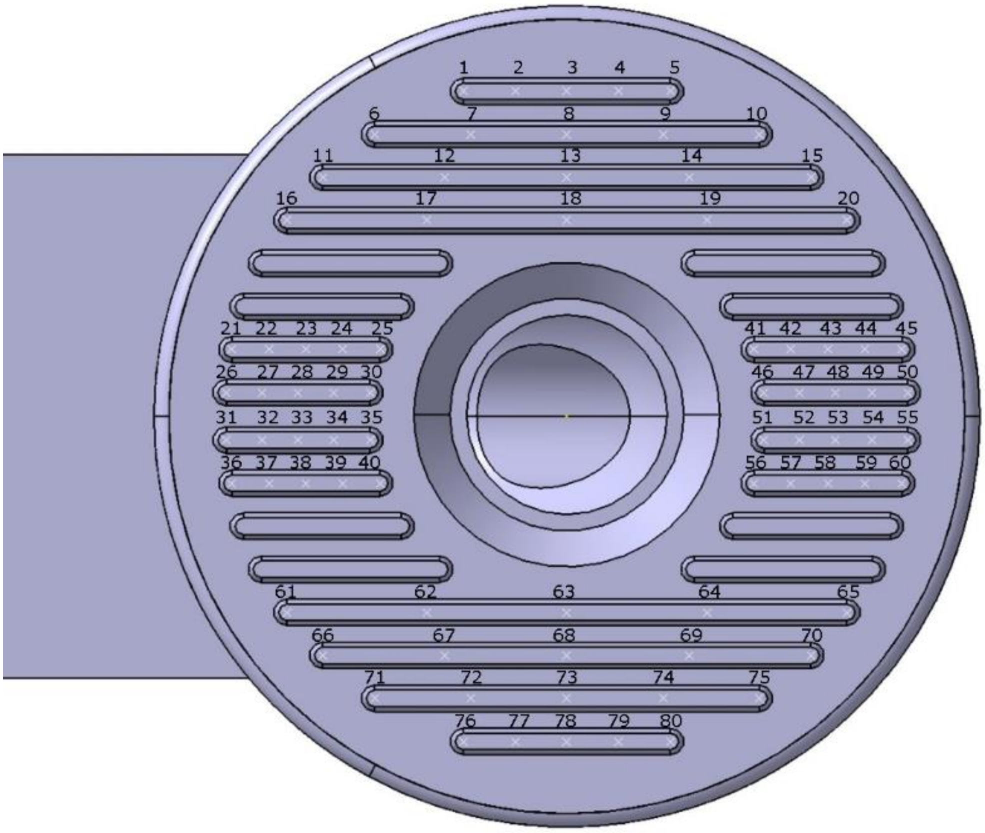

Fig. 2.2 Air outlet velocity measurement points for the RC-FL and RP-FL variants

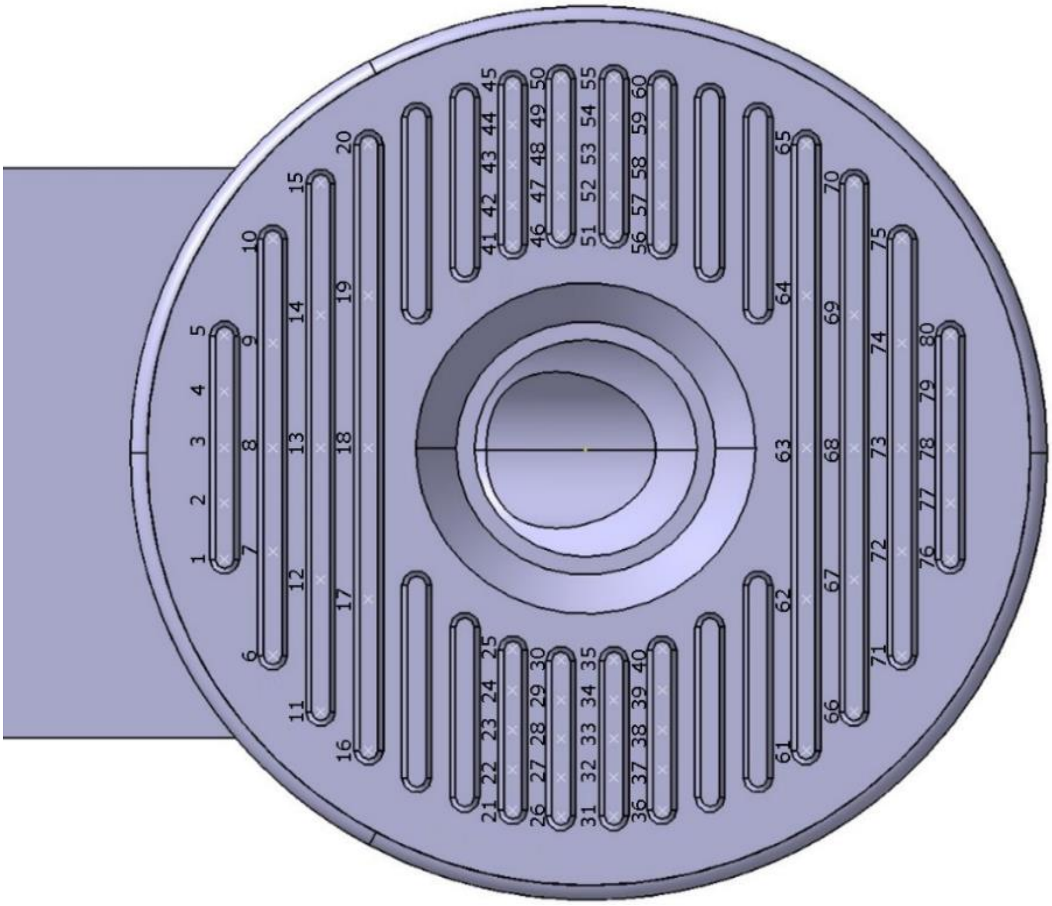

Fig. 2.3 Air outlet velocity measurement points for the RC-FP and RP-FP variants

The expression **longitudinal slots** refers to slots whose longitudinal axes are parallel to the longitudinal axis of the BCS, whereas **perpendicular slots** refer to slots whose longitudinal axes are perpendicular to the longitudinal axis of the BCS.

The average outlet air velocity through a slot j, Vmj is:

$$V_{mj} = \frac{1}{5}\sum_{i=(j-1)5+1}^{(j-1)5+5} V_i \text{, where:}$$

V$i$ is the velocity measured at point i of slot j.

j represents the slot number, with the following distribution of measurement points::

j=1 for points 1-5
j=2 for points 6-10
j=3 for points 11-15
j=4 for points 16-20
j=5 for points 21-25
j=6 for points 26-30
j=7 for points31-35
j=8 for points 36-40
j=9 for points 41-45
j=10 for points 46-50
j=11 for points 51-55
j=12 for points 56-60
j=13 for points 61-65
j=14 for points 66-70
j=15 for points 71-75
j=16 for points 76-80

The average velocity in a group k, $V_{mgk}$ will be:

$$V_{mgk} = \frac{1}{4}\sum_{j=(k-1)4+1}^{(k-1)4+4} V_{mj} \text{, where:}$$

gk- the group number, as follows:
group of slots I (k=1) – for slots $j = \overline{1,4}$;
group of slots II (k=2) – for slots $j = \overline{5,8}$;
group of slots III (k=3) – for slots $j = \overline{9,12}$;
group of slots IV (k=4) – for slots $j = \overline{13,16}$;

### 2.3.2 Modeling of thermal processes

Figure 2.46 presents the result of the combustion process simulation in the research and pre-implementation development stage for the situation of power outage at a combustion temperature of 1200 °C, while Figure 2.47 presents the result of the simulation at a combustion temperature of 800 °C.

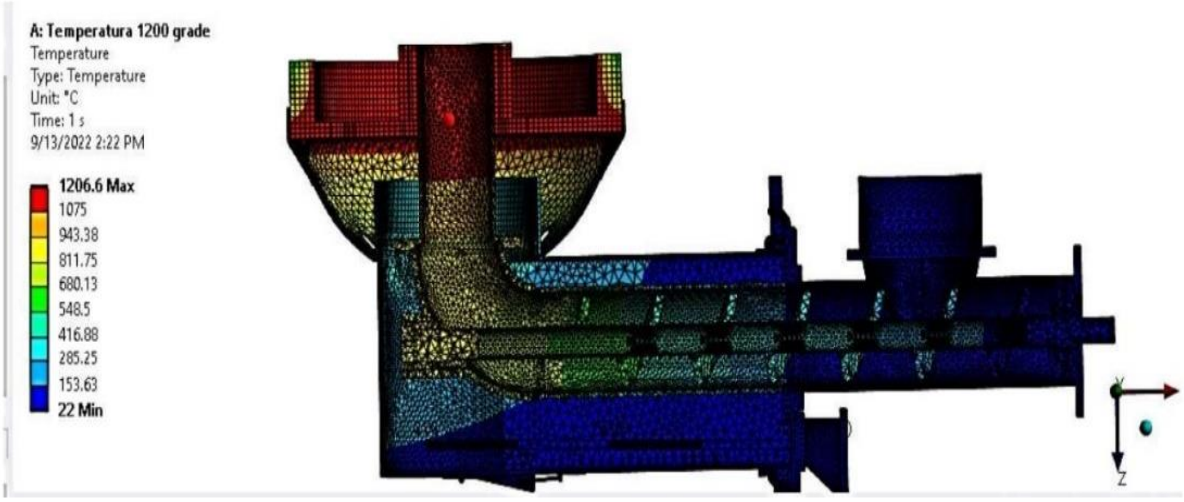

Fig. 2.4 Simulation in case of power outage at 1200 °C combustion temperature

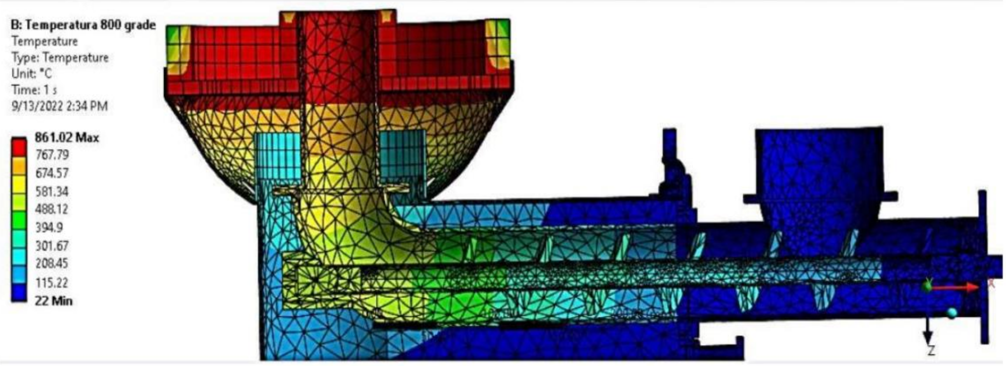

Fig. 2.5 Simulation in case of power outage at 800 °C combustion temperature

In this simulation, it can be observed that a critical area is the biomass feed pipe, where there is a significant risk of self-ignition of the biomass in the feed tube and back-burning into feeding connection area of the BCS.

To reduce the risk of self-ignition in the previously presented cases—namely, to eliminate the critical nodes in the feed tube area in the event of a power outage at 800 °C and 1200 °C combustion temperature, and also to improve the thermal performance of the prototype—continuous simulation was performed in the critical area with increased resolution and with design modifications.

Based on the conclusions and observations from the initial simulations, a new constructive solution is proposed. This is based on extending the internal refractory protection ring and interrupting the contact between the combustion grate (3) and the feed tube (1), raising the external support ring (6), and eliminating the external refractory protection ring (4). The results of the simulation are presented in Figures 2.48 and 2.49.

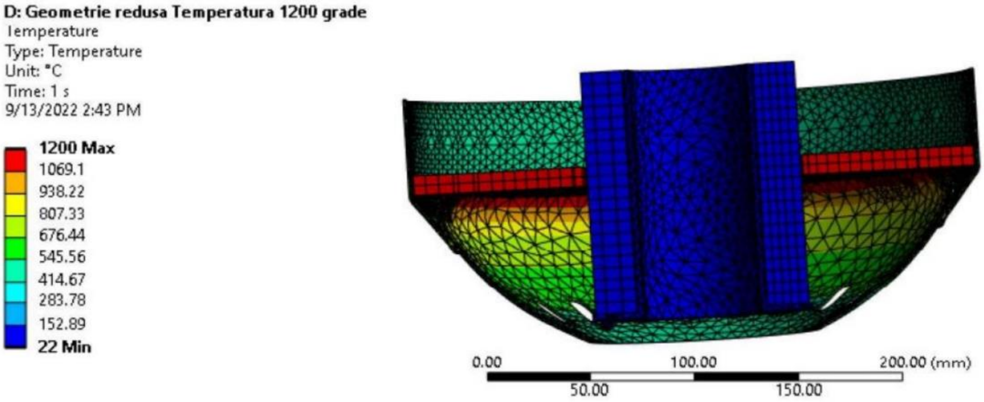

Fig. 2.6 Simulation in case of power outage at 1200 °C combustion temperature

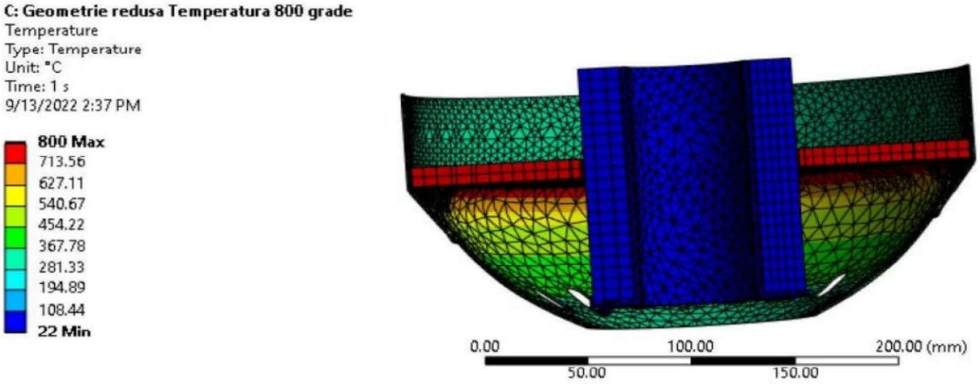

Fig. 2.7 Simulation in case of power outage at 800 °C combustion temperature

It can be observed that in the case of simulating a power outage at both 1200 °C and 800 °C combustion temperature, the proposed optimization solution eliminates the risks of biomass self-ignition in the feed tube, as well as the previously identified critical nodes. The interruption of the contact between the combustion grate and the internal feed tube through the use of refractory material resulted in the isolation of the latter, thereby increasing functional safety through constructive optimization.

### 2.3.3 Modeling of the aerodynamic field

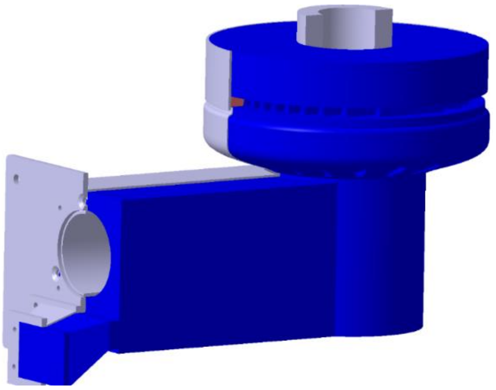

Fig. 2.8 Negative model for airflow simulation (blue) and positive model in **section view** of the proposed BCS, RC-FL variant

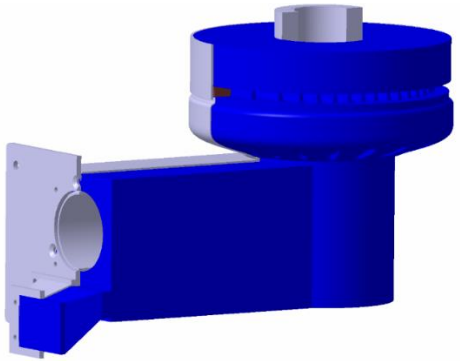

Fig. 2.9 Negative model for airflow simulation (blue) and positive model in **section view** of the proposed BCS, RC-FP variant

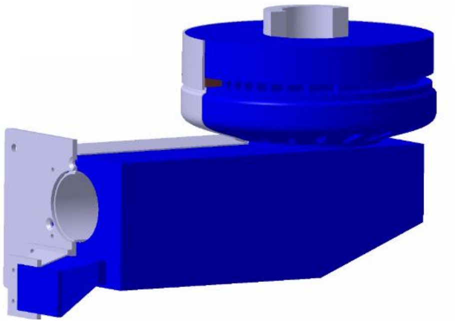

Fig. 2.10 Negative model for airflow simulation (blue) and positive model in **section view** of the technologically optimized proposed BCS, RP-FL variant

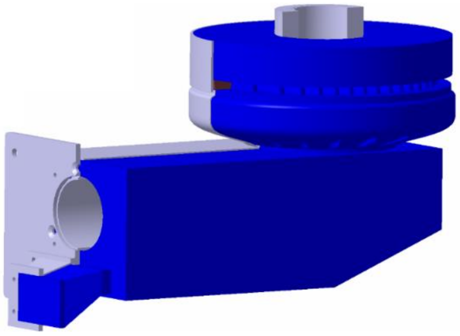

Fig. 2.11 Negative model for airflow simulation (blue) and positive model in **section view** of the technologically optimized proposed BCS, RP-FP variant

Figures 2.50, 2.68, 2.122, and 2.158 illustrate the transition from the physical geometry of the actual ducting to the negative models used in the numerical simulations for airflow analysis in the four proposed constructive solutions. The positive model (shown in gray, in section view) corresponds to the physical components, while the negative model (shown in blue) represents the internal volume traversed by the airflow and constitutes the basis for CFD simulations.

The initial air intake into the system is carried out through a section area of 35.28 cm², while the final intake into the combustion chamber is achieved through the total section area of the grate slots, amounting to 91.672 cm², for all four proposed variants (Figures 2.51 and 2.123).

The intermediate intake in the diffuser beneath the grate has a section area of 71.411 cm², while the combustion chamber volume is approximately 1599 cm³ for all four proposed variants (Figures 2.52 and 2.124).

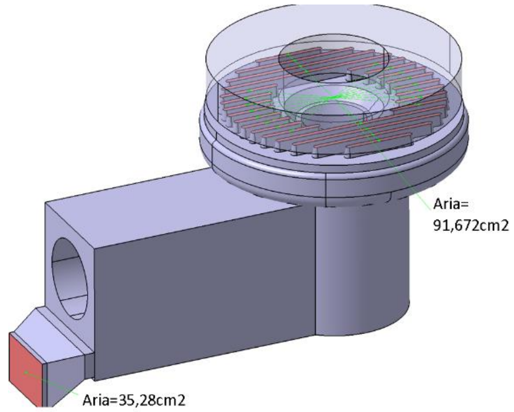

Fig. 2.12 Initial and final air intake area for the proposed BCS, RC-FL variant

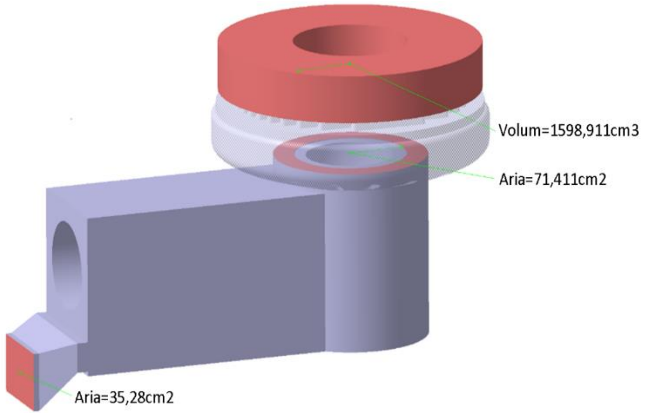

Fig. 2.13 Intermediate air intake area for the proposed BCS, RC-FL variant

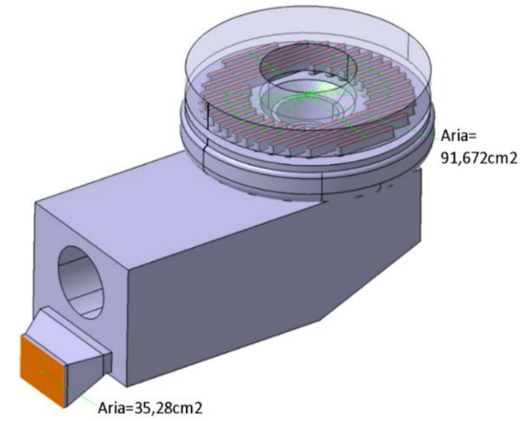

Fig. 2.14 Initial and final air intake area for the proposed BCS, RP-FL variant

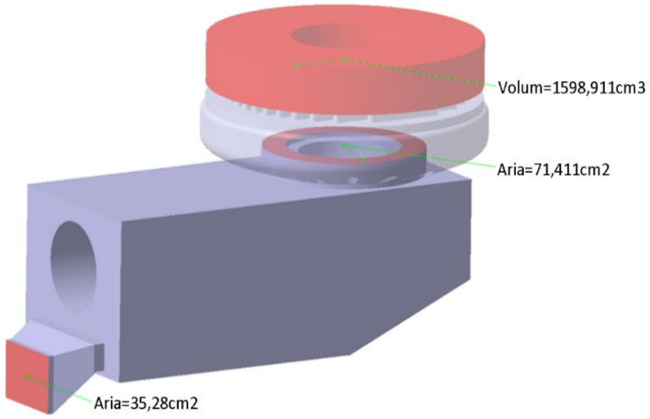

Fig. 2.15 Intermediate air intake area for the proposed BCS, RP-FL variant

For each of the four proposed BCS variants, seven fluid flow simulations were carried out at different inlet flow rates: 60 m³/h, 90 m³/h, 120 m³/h, 150 m³/h, 180 m³/h, 210 m³/h, and 240 m³/h. The results are presented in detail in the thesis and briefly summarized below.

### 2.3.4 Comparison of the solutions and proposal of the final solution

For the RC-FL burner, the total average outlet air velocity from slot groups I–IV is 1.06 m/s at a flow rate of 60 m³/h and 4.24 m/s at a flow rate of 240 m³/h. These outlet air velocities place the RC-FL variant in 3rd place out of 4.

For the RC-FP burner (Figure 2.195), the total average outlet air velocity from slot groups I–IV is 1.39 m/s at a flow rate of 60 m³/h and 5.70 m/s at a flow rate of 240 m³/h. These outlet air velocities place the RC-FP variant in 1st place out of 4.

For the RP-FL burner, the total average outlet air velocity from slot groups I–IV is 1.39 m/s at a flow rate of 60 m³/h and 5.68 m/s at a flow rate of 240 m³/h. These outlet air velocities place the RP-FL variant in 2nd place out of 4.

For the RP-FP burner, the total average outlet air velocity from slot groups I–IV is 1.04 m/s at a flow rate of 60 m³/h and 4.12 m/s at a flow rate of 240 m³/h. These outlet air velocities place the RP-FP variant in 4th place out of 4, showing the lowest outlet air velocity.

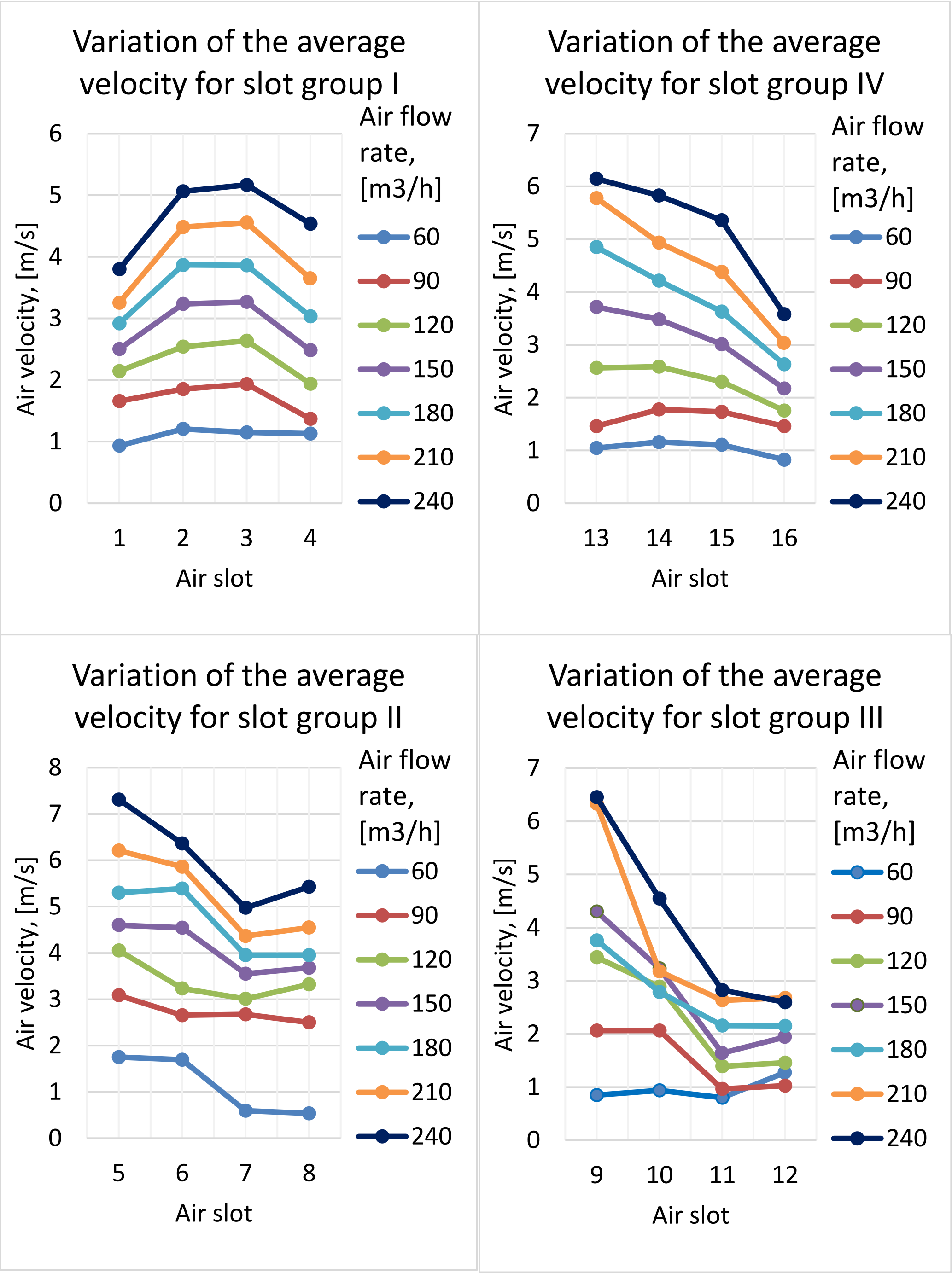

Fig. 2.16 Variation diagram of the average air velocity by slot groups, RC-FP variant

### 2.3.5 Synthesis of results

Subchapter 2.3 builds on the observations from the previous subchapters regarding the design and optimization of the BCS and is focused on the thermal and aerodynamic analysis of a new biomass burner model. The research aims to ensure the technological requirements and guarantee the safety of functional processes, especially in special situations such as power outages.

The subchapter is divided into two parts: modeling of thermal functional processes and modeling of aerodynamic functional processes.

The results of the thermal simulation for the situation of power outage—namely, the sudden interruption of fuel and oxidizer supply at 800 °C and 1200 °C induced a risk of biomass self-ignition in the feed tube. The potential hazard identified through the thermal analysis was eliminated by separating the feed tube from the combustion grate using a ceramic insulating tubular element.

The CFD simulation results are presented in Table 2.11 for all four proposed variants. From Table 2.11 it follows that the maximum total outlet air velocity is observed at the exit from the slots of the RC-FP burner.

Tab. 2.11 Average outlet air velocity by inlet slot groups in the combustion chamber for the four proposed BCS variants

| **RC-FL** | **Flow rate / average velocity per group** | **60 [m3/h]** | **90 [m3/h]** | **120 [m3/h]** | **150 [m3/h]** | **180 [m3/h]** | **210 [m3/h]** | **240 [m3/h]** |
|---|---|---|---|---|---|---|---|---|
| | Group I | 1,32 | 1,82 | 2,43 | 3,10 | 3,66 | 4,22 | 4,85 |
| | Group II | 0,90 | 1,56 | 2,25 | 2,95 | 3,23 | 4,09 | 4,39 |
| | Group III | 1,07 | 1,39 | 1,80 | 2,38 | 2,74 | 3,39 | 3,60 |
| | Group IV | 0,96 | 1,53 | 2,29 | 2,78 | 2,72 | 3,70 | 4,11 |
| | Deviation between G I and G IV | 0,21 | 0,13 | 0,09 | 0,08 | 0,22 | 0,06 | 0,23 |
| | Deviation between G II and G III | 0,05 | 0,07 | 0,25 | 0,20 | 0,01 | 0,16 | 0,25 |
| | Total average velocity G I–G IV | 1,06 | 1,57 | 2,19 | 2,80 | 3,09 | 3,85 | 4,24 |
| **RC-FP** | **Flow rate / average velocity per group** | **60 [m3/h]** | **90 [m3/h]** | **120 [m3/h]** | **150 [m3/h]** | **180 [m3/h]** | **210 [m3/h]** | **240 [m3/h]** |
| | Group I | 1,11 | 1,70 | 2,32 | 2,87 | 3,42 | 3,99 | 4,64 |
| | Group II | 1,04 | 1,61 | 2,30 | 3,10 | 3,83 | 4,53 | 5,23 |
| | Group III | 1,14 | 2,73 | 3,41 | 4,09 | 4,65 | 5,25 | 6,02 |
| | Group IV | 2,31 | 2,55 | 3,44 | 4,21 | 5,12 | 6,15 | 6,92 |
| | Deviation between G I and G IV | 0,04 | 0,05 | 0,01 | 0,11 | 0,21 | 0,27 | 0,29 |
| | Deviation between G II and G III | 0,58 | 0,09 | 0,02 | 0,06 | 0,24 | 0,45 | 0,45 |
| | Total average velocity G I–G IV | 1,40 | 2,15 | 2,87 | 3,57 | 4,26 | 4,98 | 5,70 |
| **RP-FL** | **Flow rate / average velocity per group** | **60 [m3/h]** | **90 [m3/h]** | **120 [m3/h]** | **150 [m3/h]** | **180 [m3/h]** | **210 [m3/h]** | **240 [m3/h]** |
| | Group I | 1,23 | 1,86 | 2,81 | 3,18 | 4,21 | 4,96 | 5,53 |
| | Group II | 0,78 | 1,21 | 1,20 | 1,75 | 1,77 | 2,17 | 2,61 |
| | Group III | 2,15 | 3,34 | 3,74 | 5,37 | 5,71 | 6,69 | 7,72 |
| | Group IV | 1,41 | 2,00 | 3,23 | 3,57 | 5,02 | 6,06 | 6,87 |
| | Deviation between G I and G IV | 0,22 | 0,33 | 0,80 | 0,72 | 1,22 | 1,40 | 1,46 |
| | Deviation between G II and G III | 0,37 | 0,67 | 0,26 | 0,90 | 0,34 | 0,31 | 0,42 |
| | Total average velocity G I–G IV | 1,39 | 2,10 | 2,74 | 3,47 | 4,18 | 4,97 | 5,68 |
| **RP-FP** | **Flow rate / average velocity per group** | **60 [m3/h]** | **90 [m3/h]** | **120 [m3/h]** | **150 [m3/h]** | **180 [m3/h]** | **210 [m3/h]** | **240 [m3/h]** |
| | Group I | 1,35 | 2,08 | 2,83 | 3,48 | 4,30 | 4,91 | 5,66 |
| | Group II | 1,24 | 1,95 | 2,61 | 3,19 | 3,80 | 4,44 | 5,12 |
| | Group III | 0,60 | 0,77 | 1,19 | 1,28 | 1,50 | 1,87 | 2,23 |
| | Group IV | 0,98 | 1,21 | 1,61 | 2,15 | 2,60 | 3,03 | 3,48 |
| | Deviation between G I and G IV | 0,05 | 0,07 | 0,11 | 0,14 | 0,25 | 0,24 | 0,27 |
| | Deviation between G II and G III | 0,19 | 0,22 | 0,21 | 0,44 | 0,55 | 0,58 | 0,62 |
| | Total average velocity G I–G IV | 1,04 | 1,50 | 2,06 | 2,53 | 3,05 | 3,56 | 4,12 |

The RP-FP variant shows velocities similar to the RC-FL variant, but these are low. The RC-FP and RP-FL variants are the preferred solutions, and the RC-FP solution was chosen due to the manufacturability of the collaborating factory.

## 2.4 Synthesis of the original contributions of the chapter

Following the theoretical, experimental, and applied research activities carried out throughout the entire doctoral training, the thesis brings a series of corresponding original contributions, grounded in a rigorous documentary analysis, advanced theoretical modeling, and experimental investigations conducted over the whole duration of the doctoral research.

A synthesis of the most important among them is presented below.

### 2.4.1 Theoretical contributions

The main theoretical contributions are:

1) Identification, based on the analyses performed and the case studies carried out, of the current challenges in the field of biomass utilization as a source of thermal energy, relevant for the specific aspects of the industrial manufacturing of BCS;
2) Definition, based on the identified current priorities and challenges, consequently, of the main research objective and the secondary research objectives;
3) Documentary study on the current stage of biomass thermal conversion technologies (with emphasis on domestic systems), based on market documentation complemented by scientific syntheses and specialized studies;
4) Critical analysis from constructive (shape, dimensions, etc.), functional, economic, and structural perspectives of the main types of biomass combustion systems;
5) Development, based on market documentation and scientific literature, of a system for the constructive, functional, economic, and structural classification (components, assembly, etc.) of biomass combustion systems used in domestic applications;
6) Development of an original set of criteria for the evaluation and analysis of BCS, based on the selection of 24 critical criteria identified from assertions in the specialized literature;
7) Identification, based on value analysis, of the relevant generalized functions and their corresponding critical characteristic parameters, and creation of a generalized structure of BCS to serve as a basis for proposing new models;
8) Development of two original methods (the hybrid WMM–LVA method and the WMM–LVA–SVA method) for an expeditious, rapid, and accurate comparative analysis of BCS and their performance factors;
9) General comparative analysis of 123 representative constructive solutions of BCS intended for domestic, public, and industrial applications, followed by a complex in-depth comparative analysis of 58 variants subsequently selected from the initial set;
10) Development of a calculation model intended to determine the weighted cost assigned to each function/criterion for any BCS, depending on the maximum total cost accepted for the construction of the burner;
11) Development, consequently, of a model aimed at the rational distribution of the budget among the system functions, depending on their importance and the imposed economic constraints.

### 2.4.2 Experimental contributions

Among the experimental contributions with significant impact, the following can be included:

1) Determination of the weight of importance of the criteria for the three original individual methods of evaluation and analysis of BCS, based on the functional analysis of the 58 types of BCS studied in depth;
2) Validation of the functional optimization criteria and of the two original hybrid methods for the rapid and accurate comparison of biomass combustion systems and their performance, through their application to 58 BCS. The WMM–LVA–SVA method recorded an average relative deviation (ARD) of 13.65%, while the WMM–LVA method recorded an ARD below 1%;

3) Development of an original BCS solution (constructive concept/experimental model), assimilable into industrial manufacturing, based on the results obtained from the application of the three individual methods and the two hybrid methods;
4) Study of the thermal processes specific to the proposed original BCS solution, through steady-state thermal simulation, with the aim of determining the behavior of the initially proposed BCS and the thermal nodes, for three combustion temperatures and a special operating condition considered as a fault scenario (power supply interruption, i.e. sudden cessation of fuel and oxidizer supply);
5) Constructive optimization of the initially proposed BCS through the elimination of critical thermal nodes and the risk of biomass self-ignition in the feeding tube, based on improved constructive solutions, correlated with the technological capability of a potential industrial manufacturer;
6) Verification of the proposed improvement solution by resuming the thermal simulation process, so as to confirm the protection against accidents and fire of the newly proposed solution;
7) Comparative study of the aerodynamic processes inside the BCS during operation, by CFD simulation for four proposed variants of BCS (RC-FL, RC-FP, RP-FL, and RP-FP), with the aim of optimizing the oxidizer flow through the intake ducting and the air intake velocity into the combustion chamber;
8) Study and analysis of the specific influences of airflow rate on the functional processes of the four BCS, in order to determine the optimal variant for the case of combustion in a hybrid bed ((semi)fluidized bed combined with other variants);
9) Development of a new biomass burner model of the mixed retort type, assimilable into industrial manufacturing, for the automation of the functional processes of a biomass combustion system with a power of 25–75 kW.

### 2.4.3 Contributions with Industrial Applicability

An important part of the results of the theoretical and experimental research activity can be translated into components with industrial transferability, as follows:

1) the development of a new BCS solution, applicable in industrial manufacturing and relatively easily adaptable to the technological capabilities of an enterprise specialized in series production within the field of machine and equipment construction;
2) the elaboration of original solutions for the use of thermal and CFD simulations for thermal and aerodynamic optimization in the design process of an BCS, as an alternative to the construction of costly and resource-consuming experimental models/prototypes, including time;
3) the elaboration of an original evaluation system for an BCS based on 24 critical criteria, usable for the diagnosis of corresponding constructive solutions;
4) the elaboration of an original expeditious method for establishing the percentage weighting of the optimal costs of BCS functions (correlated with their importance weighting), in correlation with the maximum total cost accepted for BCS construction;
5) the elaboration of two original methods for comparing BCSs available on the market, evaluating their performance, and identifying optimization opportunities.

# 3 CONCLUSIONS AND RESEARCH PERSPECTIVES

## 3.1 Conclusions

The present research started from the issue of the depletion of natural resources and the need to identify and implement viable solutions to meet the growing demand for thermal energy. The research was structured into three stages.

In the first stage, a general evaluation of the main technologies for biomass conversion into thermal energy was carried out through a constructive, functional, and economic analysis of the main biomass combustion systems.

The second stage was focused on developing the functional concept of a new biomass combustion system model, based on the analysis and synthesis results obtained in the previous stage, with the aim of selecting the necessary functional package and identifying the control parameters of the system already in the design phase. After identifying the functions and control parameters, the initial constructive solution of the new biomass combustion system was proposed.

In the third stage, the thermal and aerodynamic analysis of the newly proposed biomass burner model was performed to ensure both the technological requirements regarding the efficiency of biomass energy conversion in central heating furnaces, under conditions of cost-effectiveness and environmental protection, as well as the safety of functional processes, especially in special situations such as power supply interruptions. Following the thermal analysis, the initial solution was optimized constructively in order to eliminate critical thermal nodes and the risk of biomass self-ignition in the feeding tube. Subsequently, four constructive variants of the new biomass combustion system were proposed and subjected to aerodynamic simulations, being tested for seven air supply flow rates (oxidizer).

In the end, the research carried out led to the selection of the RC-FP constructive variant for the new biomass burner system.

The conducted research involved the performance of experiments for thermal and CFD analysis, as well as mathematical modeling and interpretation, which allow the formulation of the conclusions derived from the obtained results.

Thus:

- Through the initial analysis of the BCS, the initial evaluation criteria were selected and grouped in Annexes 1–3;
- Through the individual constructive analysis, the selected biomass combustion systems were classified into groups, subgroups, classes, families, and categories, based on constructive criteria. This classification of burners into distinct categories can serve as a basis for identifying potential technological issues specific to each category;
- Through the constructive, functional, and economic analysis of the main BCS, an overall picture of the existing technical concepts was created, serving as support for the development and proposal of new experimental models and/or innovative solutions;
- The research showed that the main issue of all BCS is accident and fire protection, with most high-performance systems featuring 3–4 such protections;
- Through the functional analysis of the BCS, they were divided into three power classes, namely: domestic burners (with power up to 50 kW), public-use burners (with power between 51–300 kW), and industrial burners (with power above 300 kW). Existing studies classify burners in various ways, this being the most common approach;
- Through the economic analysis of the BCS, they were divided into four price classes according to an original methodology (class 1 – low price ≤ 1200 euros, class 2 – medium price >1200 ≤1800 euros, class 3 – high price >1800 ≤2400 euros, class 4 – very high price >2400 euros);

- In order to propose a concept of BCS that is highly efficient, reliable, safe, and low-cost, it is first necessary to understand social needs, to identify the functions that will fulfill these needs, and the control parameters for these functions. Therefore, the experimental research for the integrated optimization of the functional processes of the BCS was focused on defining a package of 24 performance criteria, determining their relative importance, identifying the generalized functions of a BCS, and the parameters to be controlled. The established criteria include seven optimization directions (seven sets of criteria): economic, technological, operational, reliability, performance (efficiency and emissions), safety, and automation. The functions and parameters were divided into three categories: primary, secondary, and auxiliary.
- From the hierarchy of BCS, it resulted that the WMM–LVA–SVA method showed an ARD of 13.65%, while the WMM-LVA method showed an ARD of below 1%. Both methods provide useful conclusions, and the smaller the ARD, the more stable the method is;
- From the current research, using the WMM-LVA method, it was found that among the evaluated burners only 1 fixed-bed burner and 2 moving-bed burners fulfilled more than 70% of the critical performance criteria. Using the same method, only 13 fixed-bed burners, 8 moving-bed burners, and 1 fluidized-bed burner fulfilled more than 60% of the established critical performance criteria;
- At the end of the experimental research on the possibilities of integrated constructive and functional optimization of the BCS, two block-diagram proposals were developed to present the interaction between the physical components of the system and the control system, followed by the presentation of the integrated constructive solution in the form of a 3D model;
- Based on previous observations regarding the design and optimization of the BCS, the research continued with the thermal simulation of the proposed model. By interpreting the experimental results for the analysis of the thermal field distribution, several critical thermal nodes were identified, one of them being located at the end of the biomass feeding tube, where it came into contact with the cast iron combustion grate;
- Following the conclusions and observations of the initial simulations, the critical thermal nodes were eliminated through the optimization of the constructive solution by extending the inner refractory ring, resulting in the interruption of contact between the combustion grate and the feeding tube, raising the external support ring, and eliminating the outer refractory protective ring;
- To verify the airflow behavior for the four thermally optimized BCS variants, four 3D models (the negative model of each proposed variant) were generated and adapted for fluid flow analysis;
- In each of the 28 aerodynamic field simulation experiments, a greater influence of the constructive concept compared to the intake flow rate was observed;
- The maximum yields for the air intake velocity into the combustion chamber were obtained for the RC-FP variant (total average outlet air velocity from slot groups I–IV of 1.39 m/s for a flow rate of 60 $m^3/h$ and 5.70 m/s for a flow rate of 240 $m^3/h$) and the RP-FL variant (total average outlet air velocity from slot groups I–IV of 1.39 m/s for a flow rate of 60 $m^3/h$ and 5.68 m/s for a flow rate of 240 $m^3/h$).

The thesis brings a series of personal, theoretical, experimental, and applicative contributions, based on the literature study, thermal and CFD modeling, and experimental research carried out throughout the entire study period.

### 3.2 Research Perspectives

The main research directions identified as a result of the experience gained through the present study are:

- the extension of experimental research through the construction and testing of experimental models/prototypes of the RC-FP and RP-FL systems, in order to determine the efficiency of biomass utilization for high-quality standard pellets;
- the correlation of functional performance with the types of biomass used, by testing and comparing the behavior of the proposed variants when using various types of solid fuels (pellets, wood chips, agricultural residues);
- the extension of experimental research under real operating conditions using smart sensors (temperature and lambda), to increase safety, efficiency, and emission control for the proposed system;
- the extension of experimental research to other categories of systems beyond those dedicated to residential use;
- the development of a TRIZ-based multicriteria decision-making tool for selecting the optimal BCS variant, adapted to the specific needs of users (residential, public, industrial).

## BIBLIOGRAFIE

[1] Abas, N., Kalair, A., Khan, N. (2015). Review of fossil fuels and future energy technologies. Futures 69, 31-49.
[2] Baláž, P., Zábojník, S., Hričovsky, M. (2020). EU fossil fuel imports and changes after Ukrainian crisis. In Kliestik T. (ed) SHS Web of Conferences, vol 74, Rajecke Teplice, Slovakia, 05005.
[3] Su, Y., Zhong, S., An, L., Shen, L., Li, D. (2023). An Information System for Comprehensive Evaluation of Natural Resources and Ecosystem Services Value: Design and Case Application. Sustainability 15, 5247.
[4] Ellabban, O., Abu-Rub, H., Blaabjerg, F. (2014). Renewable energy resources: Current status, future prospects and their enabling technology. Renewable and Sustainable Energy Reviews 39, 748-764.
[5] Morone, P., D’Adamo, I., Cianfroni, M. (2022). Inter-connected challenges: an overview of bioeconomy in Europe. Environmental Research Letters 17, 114031.
[6] Saidur, R., Abdelaziz, E.A., Demirbas, A., Hossain, M.S., Mekhilef, S. (2011). A review on biomass as a fuel for boilers. Renewable and Sustainable Energy Reviews 15 (5), 2262-2289.
[7] Zhironkin, S., Abu-Abed, F. (2024). Fossil Fuel Prospects in the Energy of the Future (Energy 5.0):A Review. Energies 2024, 17, 5606.
[8] Ulpiani, G., Vetters, N., Shtjefni, D., Kakoulaki, G., Taylor, N. (2023). Let’s hear it from the cities: On the role of renewable energy in reaching climate neutrality in urban Europe. Renewable and Sustainable Energy Reviews 183, 113444.
[9] Malat’ak, J., Bradna, J., Velebil, J., Gendek, A., Ivanova, T. (2018). Evaluation of dried compost for energy use via co-combustion with wood. Agronomy Research 16 (1), 157-166.
[10] Millinger , M., Hedenus, F., Zeyen, E., Neumann , F., Reichenberg, L.,Berndes, G. (2025). Diversity of biomass usage pathways to achieve emissions targets in the European energy system. Nature Energy 10, 226-242.
[11] Jiang, Y., Van Der Werf, E., Van Ierlandb, E.C., Keesman, K.J. (2017). The potential role of waste biomass in the future urban electricity system. Biomass and Bioenergy 107, 182–190.
[12] Wang, Y., Guan, W., Liu,L., Ma, X. (2022). Biomass energy consumption and carbon

neutrality in OECD countries: Testing pollution haven hypothesis and environmental Kuznets curve. Frontiers in Environmental Science 10, 975481.
[13] Wang, J., Fu, J., Zhao, Z., Bing, L., Xi, F., Wang, F., Dong, J., Wang, S., Liu, G., Yin, Y., Hu, Q. (2023). Benefit analysis of multi-approach biomass energy utilization toward carbon neutrality. The Innovation 4 (3), 100423.
[14] Bentsen, N.S., Felby, C. (2012). Biomass for energy in the European Union – a review of bioenergy resource assessments. Biotechnology for Biofuels and Bioproducts 5 (1), 25.
[15] [1] Kazomir, E.C., Tucu, D. (2023). Safety improvement of integrated biomass combustion systems by simulation. In: Kovacev, I.; Grubor, M. (eds.), Actual Tasks on Agricultural Engineering, Proc. 49th Int. Symposium on Agricultural Engineering, Zagreb, 481-488.
[16] Ghasemian. S., Faridzad, A., Abbaszadeh, P., Taklif, A., Ghasemi, A., Hafezi, R. (2024). An overview of global energy scenarios by 2040: identifying the driving forces using cross-impact analysis method. International Journal of Environmental Science and Technology 21, 7749-7772.
[17]***https://www.bp.com/en/global/corporate/energy-economics/statistical-review-of-world-energy.html, accessed on 19.06.2023.
[18] Onuoha, K.C. (2010). What are the Prospects of an Alternative Fuel in Meeting the Rising Demand of Fossil Fuel? A Case for Biofuels. SSRN Electronic Journal. DOI: 10.2139/ssrn.1664782.
[19] Martins, F., Felgueiras, C., Smitkova, M. (2018). Fossil fuel energy consumption in European countries. Energy Procedia 153, 107-111.
[20] Lott, M.C., Pye. S., Dodds. P.E. (2017). Quantifying the co-impacts of energy sector decarbonisation on outdoor air pollution in the United Kingdom. Energy Policy 101, 42-51.
[21] Chen, J., Wu, Y., Xu, C., Song, M., Liu, X. (2019). Global non-fossil fuel consumption: driving factors, disparities, and trends. Management Decision 57 (4), 791-810.
[22] Dell’Antonia, D., Gubiani, R., Maroncelli, D., Pergher, G. (2010). Gaseous Emissions from Fossil Fuels and Biomass Combustion in Small Heating Appliances. Journal of Agricultural Engineering 4, 37-46.
[23] Pulles, T., Gillenwater, M., Radunsky, K. (2022). CO2 emissions from biomass combustion Accounting of CO2 emissions from biomass under the UNFCCC. Carbon Management, 13 (1), 181-189.
[24] Shahbaz, M., AlNouss, A., Ghiat, I., Mckay, G., Mackey, H., Elkhalifa, S., Al-Ansari, T. (2021). A comprehensive review of biomass based thermochemical conversion technologies integrated with CO2 capture and utilisation within BECCS networks. Resources, Conservation and Recycling 173, 105734.
[25] Lupu, R.A., Mirescu, R.V., Țucu, D.P., Crișan, G.C., Țucu, D. (2025). Artificial intelligence in agriculture – perception of the risks in health & safety at work. Actual Tasks on Agricultural Engineering 50, 547-555.
[26] Martins, F., Felgueiras, C., Smitkova, M., Caetano, N. (2019). Analysis of Fossil Fuel Energy Consumption and Environmental Impacts in European Countries. Energies 12, 964.
[27] García-Martos, C., Rodríguez, J., Sánchez, M.J. (2013). Modelling and forecasting fossil fuels, CO2 and electricity prices and their volatilities. Applied Energy 101, 363-375.
[28] Azni, M.A., Md Khalid, R., Hasran, U.A., Kamarudin, S.K. (2023). Review of the Effects of Fossil Fuels and the Need for a Hydrogen Fuel Cell Policy in Malaysia. Sustainability 15, 4033.
[29] Qazi, A., Hussain, F., Abd. Rahim, N., Hardaker, G., Alghazzawi, D., Shaban, K., & Haruna, K. (2019). Towards Sustainable Energy: A Systematic Review of Renewable Energy Sources, Technologies, and Public Opinions. IEEE Access, 7, 57587-57603.
[30] Bajracharya, S. (2016). Microbial electrosynthesis of biochemicals. Doctoral thesis.

Luleå University of Technology, Sweden.
[31]***https://seekingalpha.com/article/4083393-world-energy-2017minus-2050-annual-report, accessed on 16.06.2023.
[32] Barnes, J., Hanse, P., Kamin, T., Golob, U., Musolino, M. (2022). Energy communities as demand-side innovators? Assessing the potential of European cases to reduce demand and foster flexibility. Energy Research & Social Science 93, 102848.
[33] Jianga, Y., Van Der Werf, E., Van Ierlandb, E. C., Keesmana, K. J. (2017). The potential role of waste biomass in the future urban electricity system. Biomass and Bioenergy, 107, 182-190.
[34] *** https://arhiva.anre.ro/ro/despre-anre/rapoarte-anuale, accessed on 20.06.2023.
[35] Tutunaru, N.E., Țucu, D.P., Kazomir. E.C., Filipovici. A., Țucu. D. (2025). Analysis of vegetation fires from agricultural farmings in west Banat. In: Kovacev, I.; Grubor, M. (eds.), Actual Tasks on Agricultural Engineering, Proc. 50th Int. Symposium on Agricultural Engineering, Zagreb, 167-174.
[36] Angolucci, P., De Lipsis, V., Arvanitopoulos, T. (2017). Modelling UK sub-sector industrial energy demand. Energy Economics 67, 366-374.
[37] Sorrel, S. (2015). Reducing energy demand: A review of issues, challenges and approaches. Renewableand Sustainable Energy Reviews 47, 74–82.
[38] Morlei, J. (2018). Rethinking energy services: The concept of ‘meta-service’ and implications for demand reduction and servicizing policy. Energy Policy 122, 563-569.
[39]***https://www.worldbioenergy.org/uploads/231219%20GBS%20Report.pdf, accessed on 27.03.2024.
[40] Deng, S., Tynan, G.r. (2011). Implications of Energy Return on Energy Invested on Future Total Energy Demand. Sustainability 3 (12), 2433-2442.
[41]***https://ec.europa.eu/eurostat/cache/infographs/energy_balances/enbal.html?language=EN, accessed on 28.03.2024.
[42] Tursi, A. (2019). A review on biomass: importance, chemistry, classification, and conversion. Biofuel 22, 962-979.
[181] EN 303-5:2021+A1:2022. (2022). Heating boilers - Part 5: Heating boilers for solid fuels, manually and automatically stoked, nominal heat output of up to 500 kW - Terminology, requirements, testing and marking, European standard, ICS 91.140.10.
[182] EN 60730-2-5:2015/A2:2021. (2021). Automatic electrical controls - part 2-5: particular requirements for automatic electrical burner control systems, European standard, ICS 97.120.